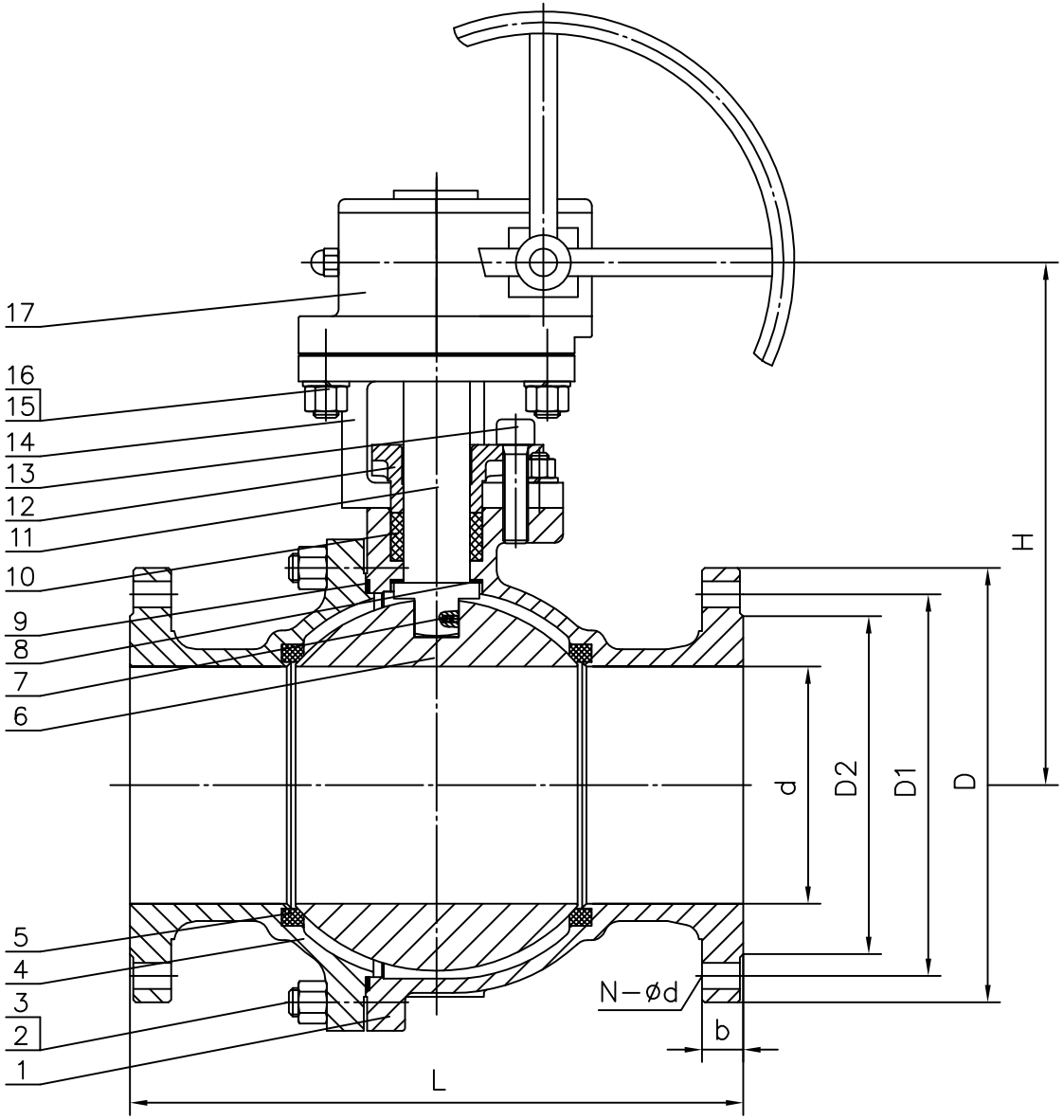

Applicable Standards

1.Design Standard: API 6D
2.Face To Face Dimensions: ASME B16.10.
3.END Flange Dimensions: ASME B16.5
4.Test Standard: API 598

Property Specification

Nominal Pressure CLASS	150LB	MPa
Hydraulic Shell Test	3.1	
Hydraulic Seat Seal Test	2.2	
Air Seal Test	0.6	
Applicable Temperature	−29℃ To 150℃	
Applicable Medium	Water,Steam,Oil Products	

NO.	PART NAME	MATERIAL
17	Worm Gear	Assembly
16	Nut	A194 2H
15	Bolt	A193 B7
14	York	A216 WCB
13	Screw	A193 B7
12	Gland Flange	A216 WCB
11	Stem	A182 F316
10	Packing	Flexible Graphite
9	Gasket	SS304+Graphite
8	Thrust Gasket	PTFE
7	Anti−Static Spring	SS316
6	Ball	SS316
5	Seat	PTFE
4	Bonnet	A216 WCB
3	Bonnet Nut	A194 2H
2	Bonnet Bolt	A193 B7
1	Body	A216 WCB

mm

size	d	L	D	D1	D2	b	N−℄d	H
8”	203	457	343	298.4	270	29	8−22	330

GEARBOX OPERATED FLOATING BALL VALVE

KOSLAN VALVE

Assembly Drawing

BALL VALVE−150LB